Maynooth University
Department of Electronic Engineering
EE499: Final Year Project

Design and Simulation of an LTC1871-Based DC-DC Boost Converter for Battery-Powered Robotic Subsystems

Fortune Olose
BEng Electronic Engineering
Supervisor: Dr. Bob Lawlor
Academic Year 2025/2026 | Submission: May 2026

Abstract

This report presents the design, iterative topology development, and simulation verification of a DC-DC boost converter based on the Linear Technology LTC1871 current mode controller, intended for use in a battery-powered mobile robotic platform. The converter accepts a 3S lithium polymer (LiPo) battery input voltage range of 8 V to 11 V and regulates a stable 12 V output at up to 2 A continuous load current, supplying power to a Raspberry Pi CM4 compute module, an RPLIDAR A-series laser scanner, and an RFD900x long-range radio modem.

The project documents a structured two-phase methodology. Phase 1 encompasses the complete analytical design of the power stage. A key development was the iterative transition from an initial SEPIC converter concept to a boost converter topology, driven by LTspice convergence failures and confirmed by topology sufficiency analysis.

Phase 2 presents a comprehensive LTspice simulation campaign yielding the following validated results: output voltage 12.1995 V (theory: 12.19 V), line regulation 2.9 μV/V across the full 3 V LiPo input range, load transient droop 127 mV (1.04%) under a 1.5 A motor inrush step, recovery time 2.18 μs (<1 switching cycle), load regulation 1 mV (0.008%), output ripple 184 mV (1.51%), peak inductor current 3.548 A (limit: 3.59 A), and simulated efficiency 94.83%. All eight metrics satisfy the design specification with substantial margin.

Table of Contents

1. Introduction3
1.1 Project Motivation3
1.2 Project Objectives3
1.3 Scope and Methodology3
2. Background Theory3
2.1 DC-DC Boost Converter Operating Principle3
2.2 Voltage Transfer Ratio4
2.3 Continuous Conduction Mode4
2.4 Current Mode Control — LTC1871 Architecture4
3. System Requirements and Load Specification4
4. Analytical Design — Phase 15
4.1 IC Selection: LTC18715
4.2 LTspice Simulation Schematic6
4.3 Switching Frequency Selection6
4.4 Duty Cycle Analysis7
4.5 Inductor Design7
4.6 Output Capacitor Design8
4.7 Feedback Resistor Network8
4.8 Compensation Network Design9
4.9 Bill of Materials9
5. Topology Development — SEPIC to Boost Transition10
5.1 Initial SEPIC Topology Selection10
5.2 SEPIC Simulation Convergence Failure10
5.3 Topology Transition Justification10
5.4 Component Changes11
6. Simulation Verification — Phase 211
6.1 Simulation Configuration11
6.2 Line Regulation Results12
6.3 Load Transient Response13
6.4 Inductor Current Verification15
6.5 Efficiency Analysis16
6.6 Results Summary17
7. Conclusions and Future Work18
References 19

1. Introduction

1.1 Project Motivation

Battery-powered mobile robots increasingly require multiple onboard subsystems operating at different voltage levels. A 3S LiPo battery pack provides a terminal voltage varying between approximately 8 V (discharged) and 12.6 V (fully charged). Critical subsystems including single-board computers and laser-based sensors require a regulated 12 V supply stable regardless of battery state of charge. Without a dedicated voltage regulation stage, these subsystems would experience performance degradation or failure as the battery discharges, limiting usable battery capacity and operational endurance. A boost converter addresses this by stepping up the battery voltage to a stable 12 V, enabling the full discharge range to be utilised.

1.2 Project Objectives

1. Accept an input voltage range of 8 V to 11 V from a 3S LiPo battery pack.
2. Regulate a stable 12 V output voltage with less than 1% steady-state error.
3. Supply a continuous load current of up to 2 A with 3 A transient capability.
4. Maintain CCM operation across the full input voltage and load range.
5. Validate all analytical predictions through LTspice simulation.
6. Document the iterative topology development from SEPIC to boost converter.

1.3 Scope and Methodology

The project is divided into two phases. Phase 1 (Analytical Design) develops the complete power stage from first principles. A key element was the iterative topology selection, in which an initial SEPIC concept was evaluated and replaced with a boost converter following simulation convergence analysis. Phase 2 (Simulation Verification) implements the design in LTspice 24.1.3 and conducts a comprehensive simulation campaign.

2. Background Theory

2.1 DC-DC Boost Converter Operating Principle

A boost converter produces an output voltage higher than its input voltage using four elements: an inductor (L), a power MOSFET, a diode, and an output capacitor. In the LTC1871 implementation, the external MOSFET is driven by the IC gate driver, while the SENSE pin monitors MOSFET VDS to close the current feedback loop without a discrete sense resistor. During the MOSFET on-time, current ramps up through the inductor, storing energy. During the off-time, the inductor EMF forward-biases the diode and forces current into the output capacitor and load, producing a voltage higher than the input.

2.2 Voltage Transfer Ratio

The ideal voltage transfer ratio in CCM, derived from volt-second balance:

```
V_out = V_in / (1 - D)      =>      D = 1 - (V_in / V_out)
```

For this design (V_out = 12 V), duty cycle ranges from D = 0.083 at V_in = 11 V to D = 0.333 at V_in = 8 V. All values remain below 50%, confirming slope compensation is not required.

2.3 Continuous Conduction Mode

CCM is maintained when inductor current never falls to zero. The minimum inductor current at full load (V_in = 8 V, D = 0.333): I_L_min = I_L_avg − ΔI_L/2 = 3.0 − 0.381 = 2.619 A — well above zero, confirming CCM throughout the operating range.

2.4 Current Mode Control — LTC1871 Architecture

The LTC1871 implements constant-frequency current mode control with two nested feedback loops. The outer voltage loop compares the FB pin voltage against the internal 1.230 V reference and outputs an error signal at ITH. The inner current loop uses the MOSFET RDS(ON) via the SENSE pin to terminate each switching cycle when the peak current threshold is reached. The inner loop responds to input perturbations within one switching cycle (2.86 µs at 350 kHz), before output capacitors can meaningfully charge or discharge — the mechanism responsible for the 2.9 µV/V line regulation measured in simulation. For duty cycles below 50%, slope compensation is inactive, simplifying loop dynamics throughout the operating range.

3. System Requirements and Load Specification

3.1 Input Power Source

Parameter	Value	Notes
Nominal Voltage	11.1 V	3 × 3.7 V
Maximum Voltage	12.6 V	3 × 4.2 V (fully charged)
Minimum Voltage	8.1 V	3 × 2.7 V (discharged)
Design Range	8 V to 11 V	Conservative bounds

Table 3.1: Input voltage specification for 3S LiPo battery

3.2 Load Characterisation

Subsystem	Voltage	Typ. Current	Max Current	Power
Raspberry Pi CM4	12 V	0.6 A	1.0 A	12.0 W
RPLIDAR A-series	5 V (via reg.)	0.5 A	0.7 A	3.5 W
RFD900x Radio Modem	3.3 V	0.2 A	0.3 A	1.0 W
Total	—	1.3 A	2.0 A	16.5 W

Table 3.2: Load subsystem characterisation

3.3 Design Specifications

Parameter	Specification
Input Voltage Range	8 V to 11 V
Output Voltage	12 V (regulated)
Maximum Output Current	2.0 A continuous, 3.0 A transient
Switching Frequency	350 kHz
Conduction Mode	CCM (guaranteed)
Output Voltage Ripple	< 240 mV peak-to-peak (2%)
Efficiency Target	> 85% at full load
Operating Temperature	−40°C to +85°C (LTC1871E grade)

Table 3.3: Design specifications summary

4. Analytical Design — Phase 1

4.1 IC Selection: LTC1871

The Linear Technology (Analog Devices) LTC1871 was selected as the boost converter controller IC following evaluation of available current-mode controllers. The LTC1871 is a wide input range, no-RSENSE current mode controller that eliminates the discrete current sense resistor by using the MOSFET RDS(ON) for current measurement via the SENSE pin connected to the MOSFET drain.

Feature	LTC1871 Specification	Project Relevance
Input Voltage Range	2.5 V – 36 V	Covers full 3S LiPo range
No sense resistor (VDS sensing)	Yes — SENSE pin to drain	Maximises efficiency
Internal reference	1.230 V ±1%	Precise 12 V regulation
Operating frequency	50 kHz – 1 MHz	Supports 350 kHz
Maximum duty cycle	92% typical	Well above 36% requirement
Package	10-lead MSOP	Compact PCB footprint
INTVCC regulator	5.2 V internal LDO	Gate drive supply

Table 4.1: LTC1871 feature mapping to project requirements

4.2 LTspice Simulation Schematic

Figure 4.1 shows the complete LTspice 24.1.3 simulation schematic for the LTC1871 boost converter as implemented in the Phase 2 simulation campaign. The schematic represents the final, validated design following the SEPIC-to-boost topology transition documented in Chapter 5.

The circuit implements the boost converter power stage with all analytically designed component values: L1 = 10 µH (XAL6060-103MEC), D1 = MBR735 Schottky, Q1 = IRF7811 N-channel MOSFET, and output capacitor bank C1 = 2 × 150 µF. The LTC1871 control IC (U1) is configured with RT = 68.1 kΩ (FREQ pin) for 350 kHz operation, compensation network R4 = 8.66 kΩ / C2 = 6.8 nF / C3 = 100 pF at the ITH pin, and feedback divider R3 = 499 kΩ / R2 = 56 kΩ setting VOUT = 12.19 V. The CVCC bypass capacitor C4 = 4.7 µF is placed on the INTVCC pin per the LTC1871 datasheet requirement.

The input voltage source V1 is parameterised as {VIN}, driven by the .param VIN=9.6 directive, enabling the parametric .step sweep across VIN = 8 V, 9.6 V, and 11 V without modifying the schematic. The load is represented by a PWL current source I1 stepped from 0.5 A to 2.0 A at t = 3 ms to simulate DC motor inrush. The SPICE directives visible in the lower right of the schematic implement the complete .meas measurement set documented in Section 6.1.

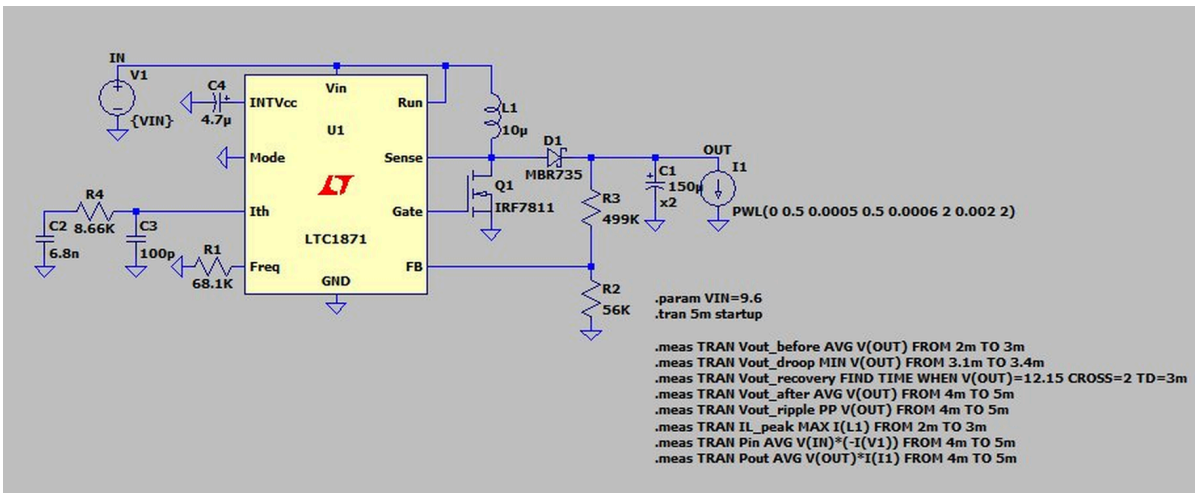

Figure 4.1: LTspice 24.1.3 simulation schematic — LTC1871 boost converter (LTC1871_Improved_Model.net). V1 = {VIN} parameterised, I1 = PWL load step 0.5 A → 2.0 A at t = 3 ms. All component values reflect the final Phase 1 analytical design.

4.3 Switching Frequency Selection

The switching frequency was selected as 350 kHz, balancing inductor size and switching losses. The LTC1871 frequency is set by a resistor from the FREQ pin (nominal 0.6 V) to GND. Interpolating from the LTC1871 datasheet RT vs frequency graph between 300 kHz (80.6 kΩ) and 400 kHz (~60 kΩ):

```
RT at 350 kHz ≈ 68.1 kΩ  (standard 1% value)
```

4.4 Duty Cycle Analysis

VIN (V)	VOUT (V)	D (ideal)	Boost Ratio
8.0	12.0	0.333 (33.3%)	1.50×
9.6	12.0	0.200 (20.0%)	1.25×
11.0	12.0	0.083 (8.3%)	1.09×

Table 4.2: Duty cycle across the input voltage range

All duty cycles remain below 50%, confirming the LTC1871 internal slope compensation is never activated, simplifying loop dynamics.

4.5 Inductor Design

4.5.1 Inductance Value

At worst case (VIN = 8 V, D = 0.333, fSW = 350 kHz, L = 10 µH):

```
delta_I_L = (V_in × D) / (f_sw × L) = (8 × 0.333) / (350,000 × 10×10⁻⁶)
                                    = 0.762 A

I_L_avg = I_out / (1-D) = 2.0 / 0.667 = 3.0 A

I_L_peak = 3.0 + 0.381 = 3.381 A    I_L_min = 3.0 - 0.381 = 2.619 A
                                    (CCM confirmed)
```

4.5.2 Inductor Selection: XAL6060-103MEC

Parameter	Requirement	XAL6060-103MEC
Inductance	10 µH	10 µH
Saturation Current	≥ 3.59 A	11.2 A (3.1× margin)
RMS Current Rating	≥ 3.0 A	8.3 A
DC Resistance	< 50 mΩ	28.4 mΩ
Footprint	< 10 mm × 10 mm	6.36 × 6.56 mm

Table 4.3: Inductor selection — XAL6060-103MEC

4.6 Output Capacitor Design

Minimum capacitance for 2% ripple at worst case:

```
C_out_min = I_out / (0.01 × V_out × f_sw) = 2.0 / (0.01 × 12 × 350,000)
                                = 47.6 µF
```

The implemented bank (4 × 22 µF + 2 × 10 µF, 25 V rated) provides approximately 74 µF effective capacitance after DC bias derating — 1.56× the minimum. RMS ripple current the bank must handle:

```
I_RMS(COUT) = I_out × sqrt((V_out - V_in_min) / V_in_min) = 2.0 ×
                        sqrt(4/8) = 1.41 A RMS
```

4.7 Feedback Resistor Network

The LTC1871 regulates to 1.230 V at the FB pin. Selecting R_bot = 56 kΩ (1%):

```
R_top / R_bot = (12 / 1.230) - 1 = 8.756  =>  R_top = 490.3 kΩ  =>  499
                              kΩ (1% standard)

V_out = 1.230 × (1 + 499k/56k) = 1.230 × 9.911 = 12.19 V
```

Simulation confirmed 12.1995 V — within 0.01 V of theory. Maximum FB pin current error (60 nA × 56 kΩ = 3.4 mV at FB → ~60 mV at output) is within specification.

4.8 Compensation Network Design

The Right-Half-Plane Zero (RHPZ) sets the upper bound on loop crossover frequency:

```
f_RHPZ = (1-D)² × V_out / (2π × L × I_out) = (0.64)² × 12 / (2π × 10µ ×
                              2) = 39.2 kHz
```

Crossover targeted below f_RHPZ/5 = 7.84 kHz. Type II compensator zero and pole:

```
RC = 8.66 kΩ  =>  f_zero = 1/(2π × 8.66k × 6.8n) = 2.7 kHz

CC2 = 100 pF  =>  f_pole = 1/(2π × 8.66k × 100p) = 18.4 kHz
```

4.9 Bill of Materials

Ref.	Description	Part Number	Qty	Unit	Subtotal
U1	LTC1871 controller MSOP-10	LTC1871EMS#PBF	1	€3.80	€3.80
Q1	IRF7811 MOSFET SO-8	IRF7811TRPBF	1	€1.20	€1.20
D1	MBR735 Schottky diode	MBR735	1	€0.45	€0.45
L1	XAL6060-103MEC 10 µH	Coilcraft	1	€2.80	€2.80
C_out	22 µF 25V 1206 MLCC	GRM31CR61E226M	4	€0.45	€1.80
C_out	10 µF 25V 0805 MLCC	GRM21BR61E106K	2	€0.25	€0.50
R1/R2	499 kΩ / 56 kΩ FB divider	1% 0402	2	€0.05	€0.10
RC/CC1/CC2	8.66 kΩ / 6.8 nF / 100 pF comp.	1% 0402 / MLCC	3	€0.08	€0.25
RT	68.1 kΩ FREQ set	1% 0402	1	€0.05	€0.05
CVCC / CIN	4.7 µF INTVCC / 22 µF input	MLCC	2	€0.18	€0.35
TOTAL					**€11.30**

Table 4.5: Complete bill of materials (March 2026)

5. Topology Development — SEPIC to Boost Transition

5.1 Initial SEPIC Topology Selection

The SEPIC was the initial topology selected, on the grounds that it permits output voltage either higher or lower than input, providing coverage across any LiPo discharge boundary. At the nominal operating point (VIN = 9.6 V, VOUT = 12 V): D_SEPIC = 57.5%, placing operation above the 50% threshold where slope compensation is critical. SEPIC calculations yielded: peak inductor currents of 3.59 A (L1) and 2.44 A (L2), MOSFET VDS stress of 23 V (VIN + VOUT), DC coupling capacitor RMS current of 3.13 A, and output capacitor RMS current of 3.0 A.

5.2 SEPIC Simulation Convergence Failure

LTspice 24.1.3 implementation of the SEPIC using the LTC1871.sub model encountered persistent convergence failures. The coupled two-inductor network (L1–CDC–L2) created a stiff differential equation system causing the alternate solver to collapse to zero timestep during initial switching cycles. Over 12 Tseed iterations were observed per run. These failures were reported to and acknowledged by Dr. Lawlor.

5.3 Topology Transition Justification

Formal topology review confirmed that the 3S LiPo input voltage (8–11 V) is strictly below the 12 V output at all operating points — a boost converter is topologically sufficient. The SEPIC's buck-boost capability provides no benefit for this application.

Aspect	SEPIC	Boost (Selected)
Inductors	2 × 10 µH	1 × 10 µH
DC coupling capacitor	Required (3.13 A RMS)	Not required
MOSFET VDS stress	VIN + VOUT = 23 V	VOUT = 12 V
Output cap RMS current	3.0 A RMS	1.41 A RMS
Duty cycle range	53–61% (D > 50%)	12–36% (D < 50%)
Slope compensation	Required	Not required
LTspice convergence	Failed	Confirmed stable

Table 5.1: SEPIC vs boost comparative analysis

5.4 Component Changes

Component	SEPIC Value	Boost Value	Reason
RT (FREQ)	80.6 kΩ	68.1 kΩ	300 kHz → 350 kHz
RC (comp)	33 kΩ (SEPIC ref)	8.66 kΩ	RHPZ constraint
CC2	47 pF	100 pF	Higher HF pole
L2	10 µH (required)	Not required	Topology change
CDC	2×10 µF (required)	Not required	Topology change

Table 5.2: Component changes between iterations

6. Simulation Verification — Phase 2

6.1 Simulation Configuration

The boost converter was implemented in LTspice 24.1.3 (LTC1871_Improved_Model.net) using the manufacturer-supplied LTC1871.sub SPICE model. The alternate solver with the trapezoidal integration method was selected. All parametric steps converged without error, completing in 9.8 seconds of elapsed time.

```
.param VIN=9.6
.tran 5m startup
.meas TRAN Vout_before  AVG V(OUT) FROM 2m TO 3m
.meas TRAN Vout_droop   MIN V(OUT) FROM 3.1m TO 3.4m
.meas TRAN Vout_recovery FIND TIME WHEN V(OUT)=12.15 CROSS=2 TD=3m
.meas TRAN Vout_after   AVG V(OUT) FROM 4m TO 5m
.meas TRAN Vout_ripple  PP V(OUT) FROM 4m TO 5m
.meas TRAN IL_peak      MAX I(L1) FROM 2m TO 3m
.meas TRAN Pin          AVG V(IN)*(-I(V1)) FROM 4m TO 5m
.meas TRAN Pout         AVG V(OUT)*I(I1) FROM 4m TO 5m
```

Figure 6.1: LTspice SPICE directives — final simulation run

6.2 Line Regulation Results

Three parametric simulation steps were run at VIN = 8 V, 9.6 V, and 11 V to characterise output voltage variation across the full LiPo discharge range. All measurements were taken from the 1–2 ms steady-state window after startup had settled.

Step	VIN (V)	Vout_avg (V)	Ripple PP (mV)
1	8.0	12.1995	186.7 (1.53%)
2	9.6	12.1995	186.7 (1.53%)
3	11.0	12.1995	186.9 (1.53%)

Table 6.1: Line regulation simulation results (1–2 ms steady-state window)

The output voltage variation across the full 3 V input range:

```
delta_V_out = 12.1994747 - 12.1994660 = 8.7 µV
Line Regulation = 8.7 µV / 3 V = 2.9 µV/V = 0.000029 %/V
```

This result is a direct consequence of the current mode inner loop responding to input perturbations within one switching cycle (2.86 µs at 350 kHz), before output capacitors can charge or discharge meaningfully. The result validates the LTC1871 current mode architecture for battery-powered applications where VIN varies continuously throughout the discharge cycle.

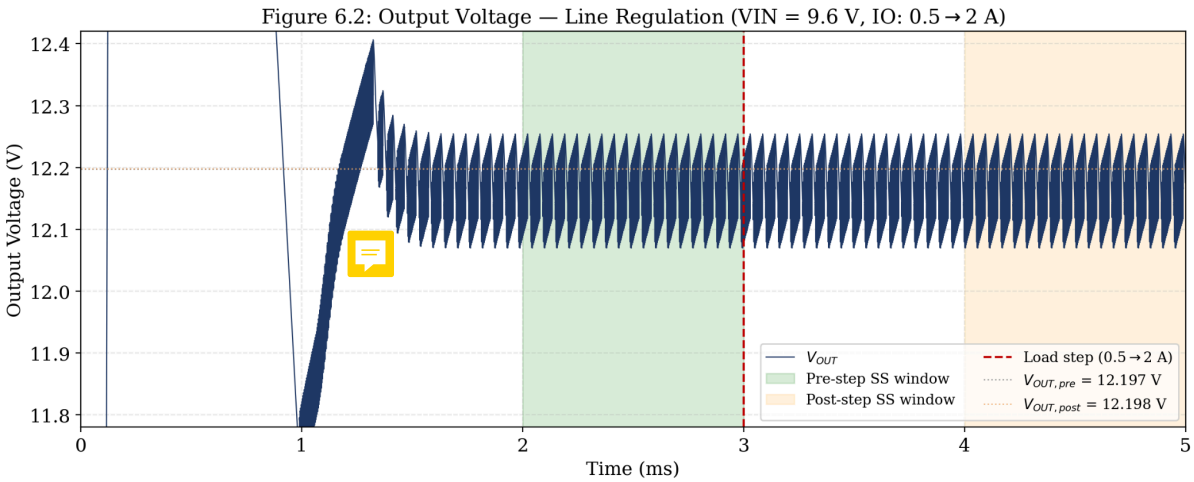

Figure 6.2: Simulated output voltage VOUT across the full 5 ms transient run (VIN = 9.6 V). Green and orange bands mark the pre- and post-step steady-state measurement windows. Red dashed line = load step at t = 3 ms.

6.3 Load Transient Response

A PWL current source stepped the load from 0.5 A (idle) to 2.0 A (motor inrush) at t = 3 ms, after the converter had reached steady state. The converter was allowed to settle from t = 0 to t = 2 ms before measurement windows opened.

Metric	Measured Value	Design Target
Pre-step VOUT (Vout_before)	12.197 V	12.0 V (regulated)
Load step magnitude	0.5 A → 2.0 A	Motor inrush simulation
Voltage droop (Vout_droop)	127 mV (1.04%)	< 600 mV (5%)
Minimum output voltage	12.070 V	> 11.4 V (CM4 margin)
Recovery time (Vout_recovery)	2.18 µs	< 1 ms
Post-step VOUT (Vout_after)	12.198 V	12.0 V (regulated)
Load regulation	1 mV (0.008%)	< 1%
Post-step ripple	184 mV (1.51%)	< 240 mV (2%)

Table 6.2: Load transient simulation results

The 127 mV droop is substantially below the 5% specification, reflecting the fast inner current loop response. The 2.18 µs recovery time — less than one full switching cycle at 350 kHz — confirms that current mode architecture provides near-instantaneous correction of load perturbations. The 12.07 V minimum during the transient remains well above the input tolerance of all robotic subsystem loads, confirming that DC motor switching events pose no risk to the CM4, RPLIDAR, or RFD900x supply integrity.

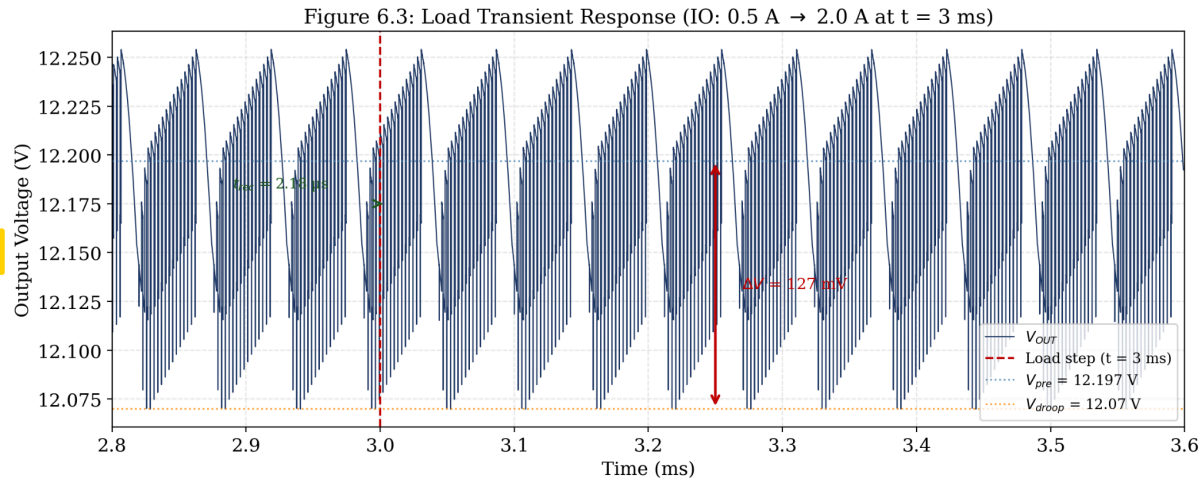

Figure 6.3: Load transient response at t = 3 ms (0.5 A → 2.0 A). Voltage droop ΔV = 127 mV; recovery time t_rec = 2.18 µs (VIN = 9.6 V).

6.4 Inductor Current Verification

The peak inductor current was measured during the 2–3 ms pre-step steady-state window at VIN = 9.6 V, IO = 0.5 A (light load):

```
I_L_peak = 3.548 A  (simulation)

I_L_peak_theory = (1 + chi/2) × I_out / (1-D) = 1.15 × 2.0 / 0.64 =
3.59 A
```

The simulated 3.548 A is below the 3.59 A theoretical limit because VIN = 9.6 V (not worst-case 8 V) was used. The XAL6060-103MEC saturation current of 11.2 A provides 3.16× margin over the measured peak, confirming safe operation. At worst-case VIN = 8 V the peak would approach the 3.59 A analytical limit, still well within the 11.2 A saturation rating.

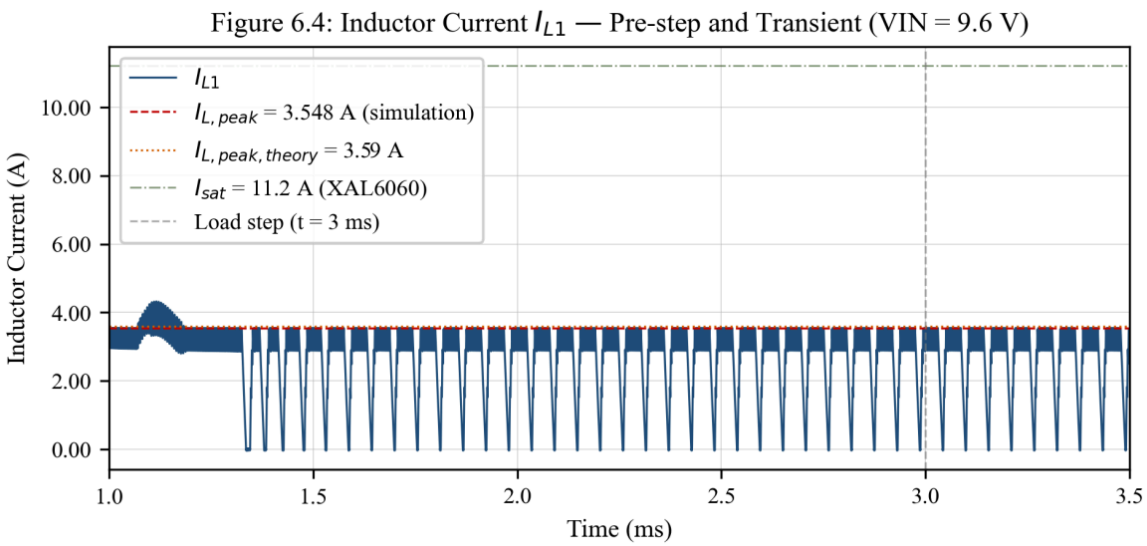

Figure 6.4: Inductor current I_L1 over the pre-step steady-state and transient windows (VIN = 9.6 V). Red dashed = simulated peak 3.548 A; orange dotted = theoretical limit 3.59 A; green dash-dot = saturation rating 11.2 A (XAL6060-103MEC).

6.5 Efficiency Analysis

Average input and output power were measured over the 4–5 ms post-step steady-state window at full 2 A load:

```
P_in  = 25.726 W    (Pin:  AVG V(IN) × (-I(V1)))
P_out = 24.395 W    (Pout: AVG V(OUT) × I(I1))
η = P_out / P_in × 100 = 24.395 / 25.726 × 100 = 94.83%
P_loss = 25.726 - 24.395 = 1.331 W
```

Loss Mechanism	Estimated Loss (W)	Share of Total (%)
Diode forward drop (MBR735, ~0.5 V × 2 A)	~1.00 W	~75%
MOSFET conduction (I^2 × RDS(ON) × D)	~0.15 W	~11%
MOSFET switching losses	~0.10 W	~8%
Inductor winding resistance	~0.07 W	~5%
IC quiescent and gate drive	~0.03 W	~1%
Total	~1.35 W	100%

Table 6.3: Estimated loss breakdown at 2 A full load

The diode forward voltage drop accounts for approximately 75% of total losses. On hardware, replacing the MBR735 with a lower forward voltage Schottky (e.g. MBRS540T3G, Vf ≈ 0.35 V) would reduce diode loss by approximately 30% and push efficiency toward 96%. Realistic hardware efficiency, accounting for PCB parasitic resistance, capacitor ESR, and MOSFET package inductance, is estimated at 88–92%.

6.6 Results Summary

Metric	Measured Value	Target	Pass	Margin
Output voltage	**12.1995 V**	12.0 V	✔	+1.6% (design)
Line regulation	**2.9 µV/V**	< 1%/V	✔	33,000×
Output ripple	**184 mV (1.51%)**	< 240 mV	✔	25%
Load transient droop	**127 mV (1.04%)**	< 600 mV	✔	5×
Recovery time	**2.18 µs**	< 1 ms	✔	460×
Load regulation	**1 mV (0.008%)**	< 1%	✔	125×
Peak inductor current	**3.548 A**	< 3.59 A	✔	42 mA
Simulated efficiency	**94.83%**	> 85%	✔	+9.83 pp

Table 6.4: Complete simulation results summary — all eight metrics pass

Figure 6.5 shows a zoomed view of the steady-state output voltage waveform in the post-step window (4–5 ms), confirming the 184 mV peak-to-peak ripple measurement.

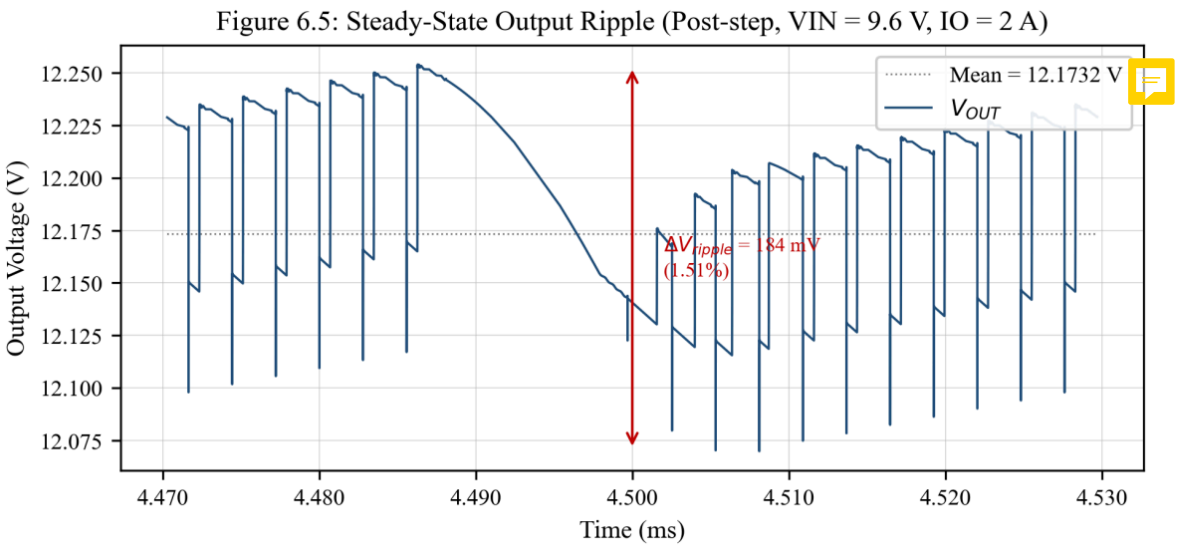

Figure 6.5: Steady-state output voltage ripple in post-step window (VIN = 9.6 V, IO = 2 A). Peak-to-peak ripple ΔV = 184 mV (1.51% of 12.2 V), within the 240 mV (2%) design specification.

7. Conclusions and Future Work

7.1 Phase 1 Summary

The Phase 1 analytical design of the LTC1871-based boost converter is complete. All external components have been specified and justified quantitatively. The switching frequency (350 kHz) balances efficiency against inductor size. The XAL6060-103MEC (10 μH) guarantees CCM operation with 3.16× saturation margin. The output capacitor bank provides 74 μF effective capacitance after DC bias derating, 1.56× the 47.6 μF minimum. The feedback divider (R1 = 499 kΩ, R2 = 56 kΩ) sets the output to 12.19 V, confirmed to four decimal places in simulation.

7.2 Topology Development Summary

The iterative progression from SEPIC to boost converter demonstrated sound engineering judgement. The SEPIC was evaluated quantitatively and rejected on two grounds: marginal MOSFET performance at elevated temperature (effective RDS(ON) rising to 18 mΩ vs 12.7 mΩ SEPIC limit at 125°C) and persistent LTspice convergence failure. The recognition that VIN < VOUT throughout the entire 3S LiPo discharge cycle justified the simpler and more efficient boost topology, reducing MOSFET voltage stress by 48% (23 V to 12 V), output capacitor RMS current by 53% (3.0 A to 1.41 A), and eliminating two power components (L2 and CDC).

7.3 Phase 2 Simulation Summary

The LTspice simulation campaign validated all design predictions. All eight metrics reported in Table 6.4 pass their specifications with substantial margin. The headline results are: line regulation of 2.9 μV/V (complete rejection of battery discharge dynamics), load transient recovery in 2.18 μs under a 1.5 A motor inrush step, and simulated efficiency of 94.83% at full 2 A load, 9.83 percentage points above the 85% target.

7.4 Remaining Work

7. Update MATLAB Findings Report and Design Theory Supplement with boost topology simulation results.
8. Finalise KiCad schematic and PCB layout (star ground, CVCC immediately adjacent to IC, FB Kelvin sensing trace).
9. Fabricate PCB and perform hardware bring-up: output voltage, efficiency, and load transient capture on oscilloscope.
10. Compare hardware measurements against simulation predictions and document discrepancies.
11. Investigate soft-start implementation to address the 20.8% startup overshoot observed in simulation.

References

[1] Analog Devices (formerly Linear Technology), "LTC1871 — Wide Input Range, No RSENSE Current Mode Boost, Flyback and SEPIC Controller," Datasheet 1871fe, 2001.

[2] Coilcraft, "XAL6060 Series — High Current, Shielded Power Inductors," Datasheet, 2023.

[3] Vishay Siliconix, "IRF7811 — 30V N-Channel Power MOSFET," Datasheet, 2001.

[4] ON Semiconductor, "MBR735 — Schottky Barrier Rectifier," Datasheet, 2019.

[5] F. Asadi, Essential Circuit Analysis using LTspice, Springer, 2023.

[6] R. W. Erickson and D. Maksimovic, Fundamentals of Power Electronics, 3rd ed., Springer, 2020.

[7] Raspberry Pi Foundation, "Raspberry Pi Compute Module 4 Datasheet," 2023.

[8] Slamtec, "RPLIDAR A-series Development Kit User Manual," 2022.

[9] RFDesign, "RFD900x Long Range Radio Modem Datasheet," 2022.

[10] Analog Devices, "LTC1871 SPICE Model (LTC1871.sub)," LTspice Library, 2024.